Partially Compensated Single Counterbalance Valve - Flanged

Valvola Overcenter Singola Parzialmente Compensata - Flangiata

WOSPC 60 – 1F PE

TECHNICAL DATA

- **Flow:** 60 l/min
- **Max setting pressure:** 350 bar
- **Materials:** Steel Body
- **Pilot ratio:** 4:1 (if request 1:1; 8:1; 11:1)
- **Weight:** See Table

- **Note:** - Pressure setting must be 30 % higher that pressure induced by the load.
  - Recommended for use with closed center spools.

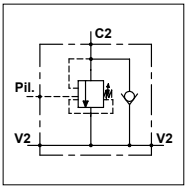

PORTS		
V2	**3/8**	**1/2**
C2	ø9	
Pil.	**1/4**	1/4
	3/8	
DIMENSIONS		
A	55	65
B	30	35
Weight (kg)	1.150	1,500

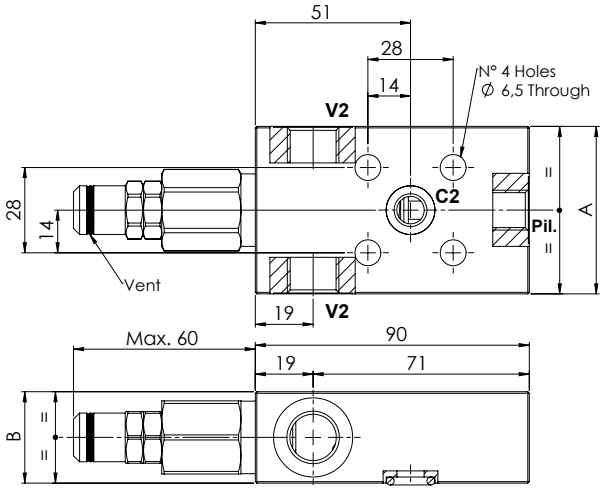

PRESSURE DROP CURVES

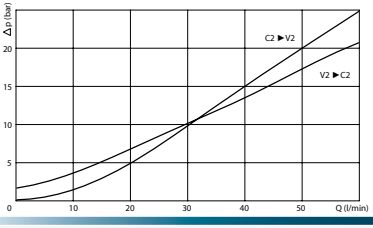

SPRINGS						
Code	**20**			**35**		
Pilot ratio	Adjustable pressure range bar	Pressure increase bar/turn	Standard setting bar	Adjustable pressure range bar	Pressure increase bar/turn	Standard setting bar
1:1	10-70	15	10	30-200	25	30
4:1	60-210	70	170	80-350	120	280
8:1	60-220	50		100-350	85	
11:1	60-250	90		80-350	150	

ORDERING CODE

WOSPC | 60 | [ ] | 1F | PE | [ ] | [ ] | [ ] | [ ]

Ports Size:
- 3/8
- 1/2

Pilot Port:
- Omit if 1/4
- 3/8

Springs:
- 20
- 35

Pilot Ratio:
- Omit if 4:1
- 1 = 1:1
- 8 = 8:1
- 11 = 11:1

Adjustment if Required:
- Omit if not required
- Value