SP002

- **Flow:** G 1/2: 90 l/min with 50 l/min in R
  G 3/4: 150 l/min with 90 l/min in R
- **Max setting pressure:** 250 bar (350 bar)
- **Materials:** Aluminium Body (Steel body if required)
- **Note:** Handwheel in Aluminium Black Anodized
- **Weight:** See Table

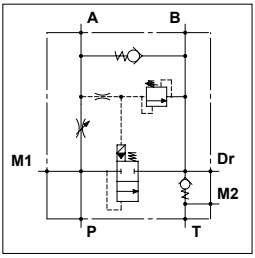

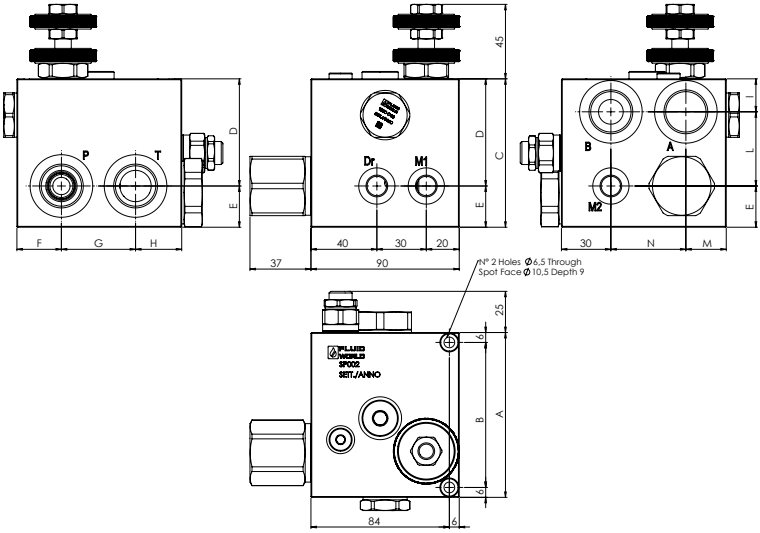

PORTS		
P - T - A - B	1/2	3/4
M1 - M2 - Dr	1/4	
DIMENSIONS		
A	90	100
B	78	88
C	80	90
D	60	65
E	20	25
F	25	27
G	40	45
H	25	28
I	16	20
L	44	45
M	18,5	24,5
N	41,5	45,5
Weight (kg)	2,200	2,600

ORDERING CODE

Our sales department is disposal to assist you in selecting
the most suitable solution to your requirements